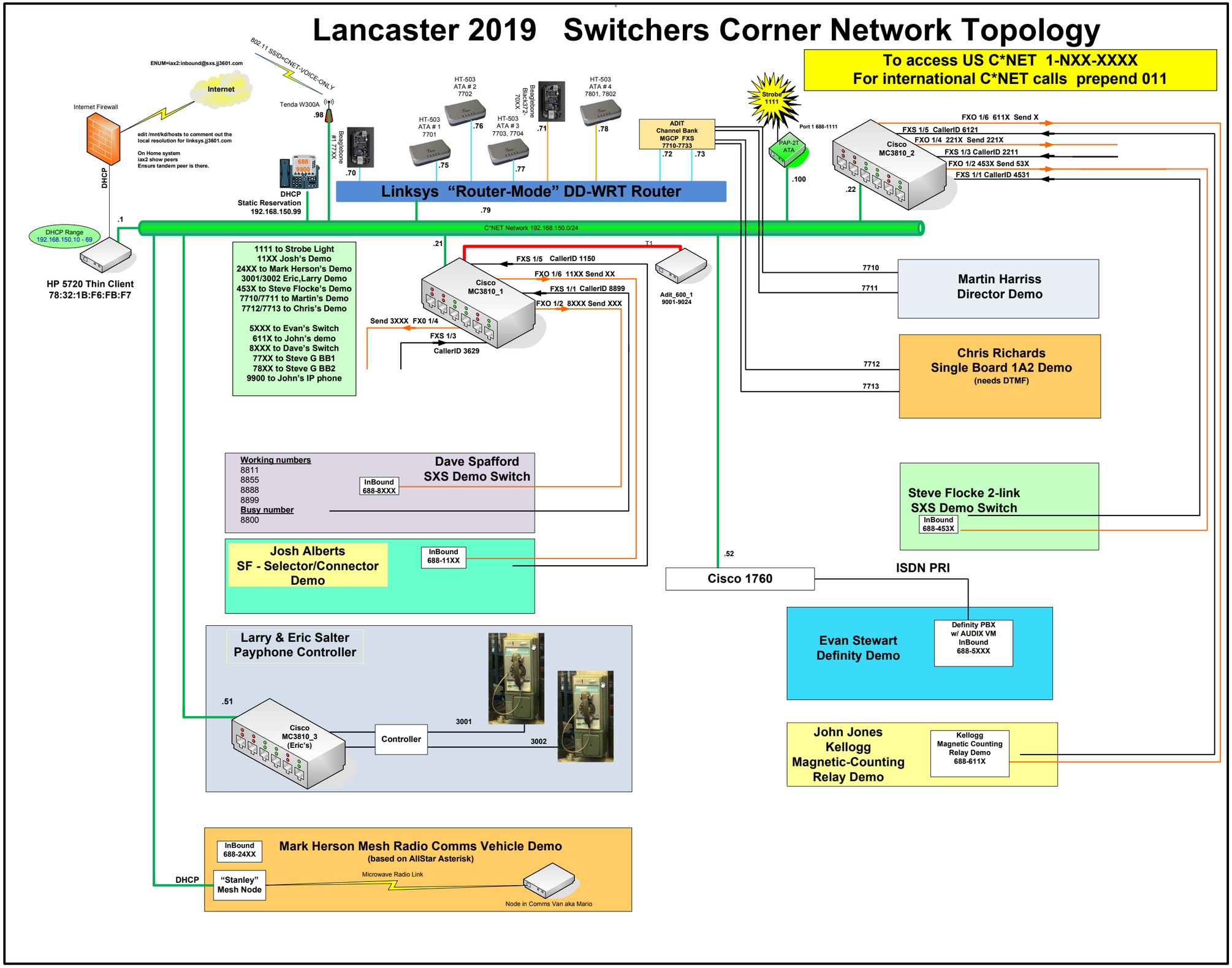Lancaster 2019 Switchers Corner Network Topology